CRYPTON

In tune with the future

BRAKE TESTER CVBT8500

CALIBRATION INSTRUCTIONS

TES1417/B
Mar 2004

IMPORTANT

Every reasonable effort has been made to ensure that information within these Calibration Instructions is correct at the time of release, but Crypton cannot accept-responsibility for any errors that may occur.

The information in these Calibration Instructions is subject to change without notice, and does not represent a commitment on the part of Crypton.

Service & Warranty

The reliability of this equipment is fully supported by our service agent.
Please refer to the page at the end of this manual for full details.

Note:
Your attention is drawn to our Terms & Conditions of Sale. If a service engineer is called out. under service warranty where, upon inspection and test the equipment is found to be in full working order and no fault found, the user is liable to be charged the cost incurred for this call out. Before calling out an engineer, ensure your equipment is faulty by checking its operation, particularly mains supply and fault codes/self test if applicable.

WARNING:
Do not attempt to operate this equipment unless you have read and understood these instructions.

CONTENTS

Safety precautions	4
Hints and Tips	5
Calibration	6
Introduction	6
Calibration rig for CVBT8500	6
Begin calibration	8
Fitting cal. tool	9
Initial preload	10
Adjusting full scale	10
Complete range check	10
Switch to second side	10
Drive Train drag	11
End calibration	11
Calibration table CBT8500	11
After sales service	12
Notes	13

SAFETY PRECAUTIONS

Read these calibrating instructions carefully and thoroughly before attempting to operate the equipment.

Always follow the procedures and actions defined in this manual, failure to do so may result in personal injury or other damage. The manufacturer cannot be held liable for personal injuries or vehicle damage that occur as a result of misuse of the equipment.

All the national and international safety guidelines and legal regulations are to be followed when operating testing equipment.

The operator is obliged to adhere to all the regulations applying to the workplace and to ensure his knowledge of such regulations is up to date.

Do not allow other personnel near the test vehicle or rollers while a test is in progress. Check that the area is clear before the rollers are started or the vehicle moved EACH TIME this action is taken.

Testing often takes place with the engine running, to provide a vacuum supply to the brake servo. Ensure exhaust extraction or adequate ventilation is used to clear the poisonous exhaust gasses.

Do not modify the equipment or change any internal settings – this could result in a very dangerous condition where the rollers could be started WITHOUT a vehicle in the rollers!

NEVER depress the third roller with your hand, foot or a tool with the power switched on.

HINTS & TIPS

The brake tester must only be used for its intended purpose.

All the performance limits are to be followed, do not drive excessively heavy vehicles over the pit unit or otherwise abuse the equipment as damage may occur and test result accuracy may be affected.

Only authorised and well-trained personnel should perform the testing.

The work area should be kept clean and dry.

Always keep a safe distance from moving parts. The area must be marked so that vehicle owners are aware of the danger associated with brake testing.

Note the location of the emergency stop switch before starting to use the equipment.

When driving off the brake tester, the roller motors should be switched on so that the rollers are driven. This limits the speed of the rollers to a safe value. If the vehicle is driven off the rollers without them being powered damage may occur.

Do NOT use the brake tester to start the engine of a vehicle as this may damage the electric motors.

Drive on and off the tester slowly and in a controlled manner.

Always check the ground clearance of the vehicle is adequate before performing the test.

CALIBRATION

Introduction

The following diagram illustrates the set-up of the calibration rig used on CVBT8500.

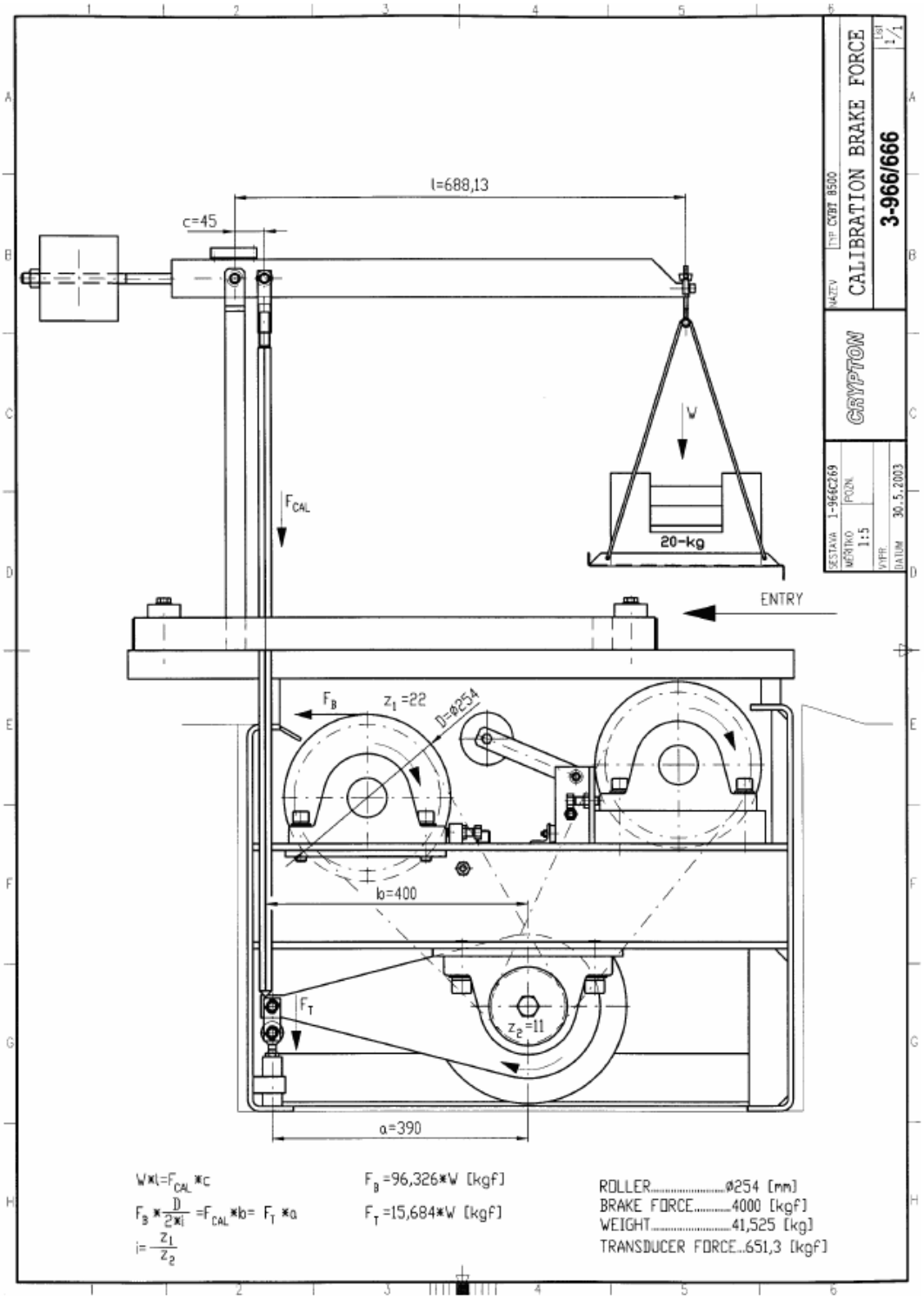

Each roller brake tester uses a calibration table to convert the applied mass into a brake force reading. Calibration value tables will be given at the end of this chapter.

Calibration can be performed with or without the rollers running.

RECOMMENDATION: This is the only case when rollers can be started without car on the unit. It is highly recommended to pull the motor supply fuses, when calibration is to be done without running roller to avoid the possibility of starting the motors.

The signals from the brake force transducers are too small to be taken directly to the control console. Amplifier boards, mounted in waterproof plastic boxes, are attached to the frame of the pit unit and these increase the signal levels before it is routed to the control console. Remove the box lid to gain access to the adjustment potentiometers. CVBT8500 has an individual amplifier box for each side.

A amplifier board type BT-20 is used.

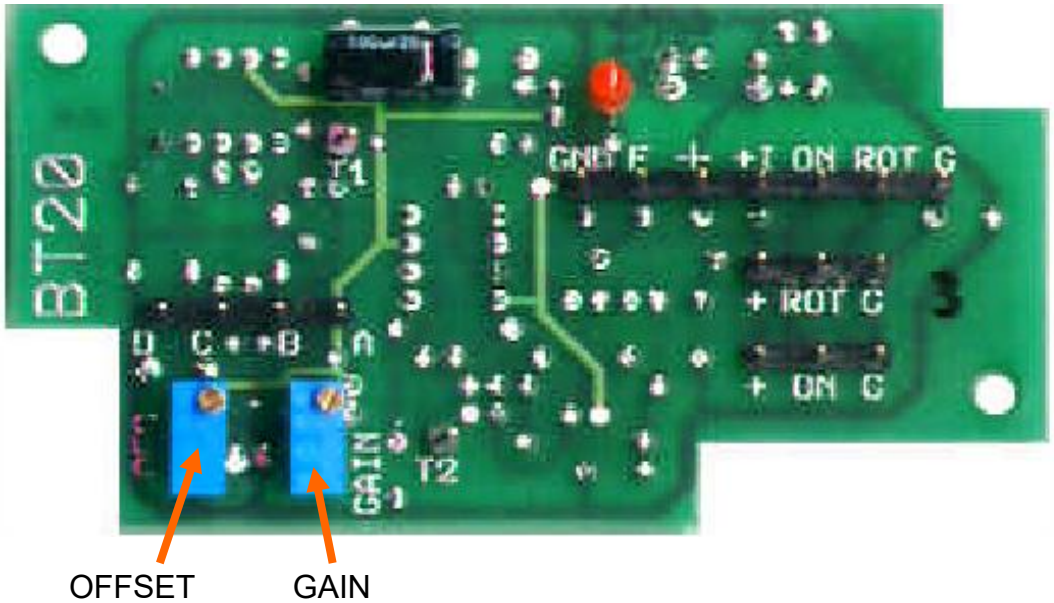

Amplifier type BT-20

BEGIN CALIBRATION

Remove motor fuses to prevent rollers from being driven and Switch on.

RESET the system by pressing **2 nd** key and then **STOP** key

Now press **2 nd** and **OK** keys together to set the system into calibration mode.

LEFT ARROW or **RIGHT ARROW** keys can be used for side selection.

The pointer shows 0, this is relative force reading – with subtracted offset value, that is used during measurement.

When the **UP ARROW** key is pressed, the system is switched into absolute force reading, the red Lock indicator light is ON and pointers show absolute force value – without subtracted offset.

Press **DOWN ARROW** key to switch back to relative force display.

Calibration has to be performed in the relative force display mode, the absolute force display is used only for initial offset adjustment.

Note: On the dual scale CVBT8500 the orange range indicator lights will show which scale is being used.

Fitting cal. tool

Picture of CVBT8500 with calibration tool showing push rod

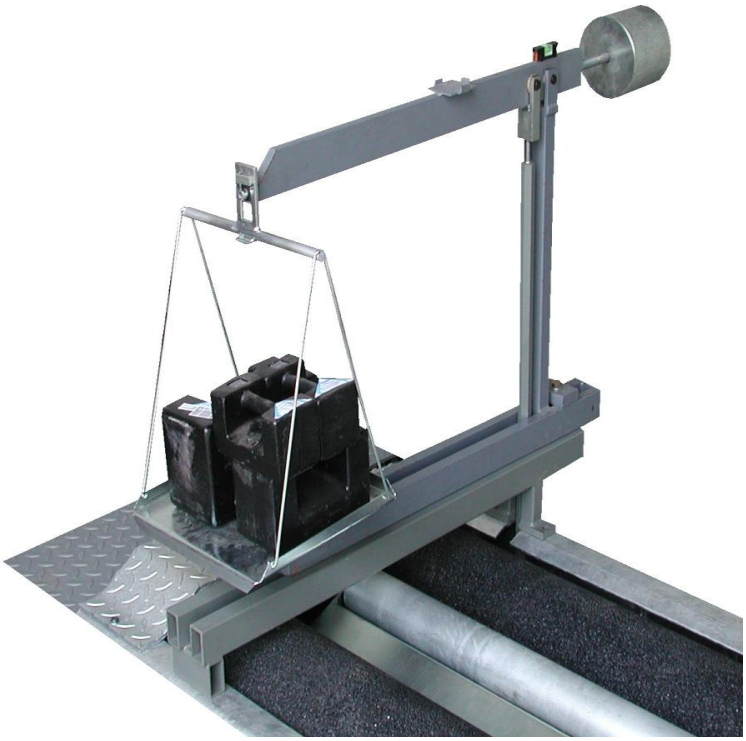

Picture of CVBT8500 with cal rig mounted

Put the push rod of the calibration tool into the hole in the frame of the brake tester and slowly place the tool down onto the frame. Position the tip of the push rod into the small hole on the transducer arm. Fix the calibration tool with four screws to the roller brake tester. Ensure these are securely tightened as large forces exist at these attachment points.

Place the pan on the end of the calibration tool and balance it with the weight on the opposite side of the arm in order to get the pointer exactly on zero.

Initial preload

Gradually place the weights on the pan in order to reach the highest applicable force according to the calibration table for respective brake tester. Remove the weights. If necessary, adjust **offset** either inside amplifier or reset it by pressing **SEC** key so that pointer shows zero.

Adjusting full scale

Gradually place all the weights in the pan in order to reach the highest applicable force according to the calibration table for respective brake tester. Adjust **gain** inside the amplifier until the pointer shows the correct reading.

Remove all the weights from the pan. If necessary, adjust **offset** either inside amplifier or reset it by pressing **SEC** key so that pointer shows zero.

The amplifier does not have independent offset and gain adjustment. Altering the gain changes the offset value but change of offset has no influence on the gain adjustment.

Repeat the described procedure until the required accuracy is obtained.

Complete range check

Place weights on the pan one at a time until full load is applied. After each weight is placed on the pan, write down the reading of pointer and compare these values with values from calibration table.

Switch to second side

Calibration has to be performed separately for each side of brake tester. Press **RIGHT ARROW** key to switch to right side or **LEFT ARROW** key to switch to the left.. Reposition calibration rig and repeat the described procedure.

Drive Train Drag

Remove the calibration tool, refit the lid(s) of the amplifier box(es) and refit the motor fuses.

Ensure that it is safe to start rollers, then start each roller in turn and note the brake force reading. As this Class V brake tester can also test Class VII the drag must not exceed 3% of the maximum reading for Class VII

Maximum drag = 3% of 1250 kgf = 37 kgf

End calibration

Exit the calibration mode by pressing **2 nd** and **STOP** key at the same time. Refit cover plates.

Calibration table CVBT8500

Weight in pan kg	Force on lever of gearbox kN	Calculated brake force kgf
0	0	0
1	134.3	98
2	269.9	197
4	539.9	394
7	957.8	699
15	1990.9	1453
25	3330.9	2431
40	5302.6	3870

AFTER SALES SERVICE

Apart from the routine maintenance and adjustments stipulated in this manual the equipment must not be tampered with in any way. All further servicing must be carried out only by an engineer from our Authorised Agents. Failure to observe these conditions will invalidate the Guarantee.
On-Site Service / Overhaul / Spare Parts
If you require a Service Engineer to attend ON SITE, either due to an equipment fault, or for machine calibration, or if the equipment covered by this manual requires to be sent back for factory overhaul, or if you need spare parts, please contact our Product Support Helpline at the following number.
Tel: 01278 436225 Fax: 01278 436238

Overseas

Service abroad is provided by the agent from whom your equipment was purchased.

Crypton provide information and contracts covering:

Car Data, Fault Code Information, Diagnostic Information, Technical Topics, Software Support Contracts, Software Updates & Accessories

Helplines

Crypton run an Equipment Helpline during normal office hours.

Tel: 01278 436225 Fax: 01278 436238
email: support@CryptonTechnology.com

A fully comprehensive Product Support Contract is also available which provides additional assistance with equipment / technical support. Please contact Product Support on the above Helpline no. for further details.

Notes: